INTERLOCK IS NOT REQUIRED FOR MOST HOT WATER SYSTEMS THAT INCLUDE DOMESTIC WATER SUPPLY AND USE THE LEGALETT-SPECIFIED PUMP CONTROLLED BY A SUMMER/WINTER SWITCH. Refer to the **Hot Water Supply Schematic** and Heater & Control Specifications on the design drawing.

However, in some scenarios, such as a dedicated heat-only boiler hot water system, it may not be desirable or possible to have a boiler armed for the duration of the heating season, i.e. during times when all zones are off. Thus a signal is required from the LEGALETT units that will arm the boiler and/or turn on a circulation pump. The following are generic wiring diagrams to assist the mechanical contractor in interfacing the LEGALETT System with a boiler and/or pump, if required.

3200/5200/5500 SERIES LEGALETT WATER COIL HEATERS - SINGLE LOW VOLTAGE (DRY CONTACT) INTERLOCK SIGNAL FROM HEATER

Scenario 1 - Boiler only is interlocked (pump runs continuously or is controlled and powered by the boiler)

Scenario 2 - Pump module only is interlocked (constant hot water supply)

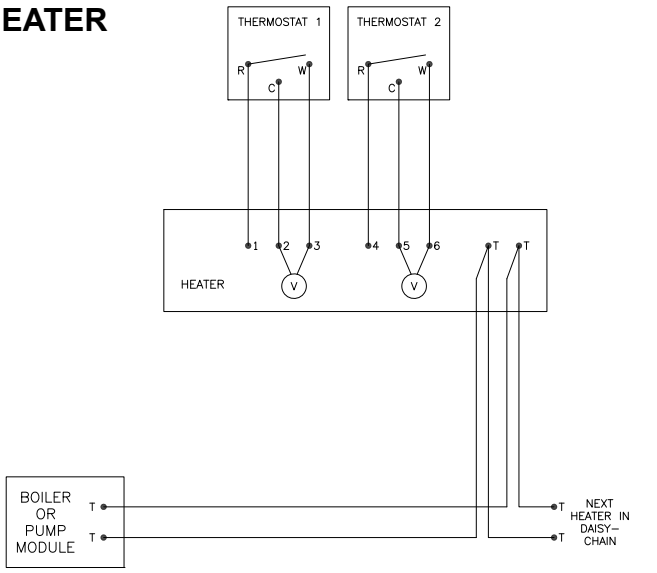

INTERLOCK REQUIRES 2 CONDUCTORS FOR THE FIRST HEATER FROM HEATER TO BOILER/PUMP INTERLOCK AND 2 CONDUCTORS CONNECTING EACH REMAINING HEATER TO THE NEXT HEATER IN A DAISY-CHAIN ARRANGEMENT OR 2 CONDUCTORS CONNECTING EACH REMAINING HEATER TO THE BOILER OR PUMP MODULE
EXISTING INTERNAL HEATER WIRING NOT SHOWN FOR CLARITY
PUMP MODULE BY OTHERS. IN LIEU OF A PUMP MODULE, REFER TO THE OTHER DIAGRAM TO SWITCH LINE VOLTAGE TO A PUMP
V = LEGALETT VALVE ACTUATOR

3200/5200/5500 SERIES LEGALETT WATER COIL HEATERS - TWO LOW VOLTAGE (DRY CONTACT) INTERLOCK SIGNALS OR DRY CONTACT PLUS LINE VOLTAGE POWER SUPPLY FOR PUMP (BOTH VIA A 24V SIGNAL FROM HEATER)

Scenario 3 - Boiler and pump are independently interlocked

Scenario 4 - Pump only is powered (constant hot water supply)

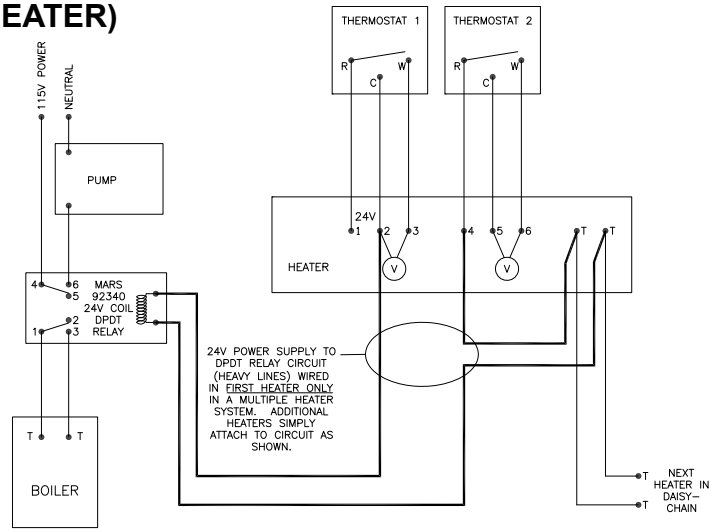

INTERLOCK REQUIRES 2 CONDUCTORS FOR THE FIRST HEATER FROM HEATER TO INTERLOCK RELAY AND 2 CONDUCTORS CONNECTING EACH REMAINING HEATER TO THE NEXT HEATER IN A DAISY-CHAIN ARRANGEMENT
EXISTING INTERNAL HEATER WIRING NOT SHOWN FOR CLARITY
RELAY BY OTHERS – MARS 92340 OR GENERIC EQUIVALENT 24V COIL DPDT RELAY
OPTIONAL PUMP MODULE BY OTHERS – USE TERMINALS 4 AND 6 ON 92340 RELAY TO CONTROL PUMP MODULE IN LIEU OF DIRECT LINE VOLTAGE PUMP CONTROL
CIRCUIT CAN BE USED TO SUPPLY LINE VOLTAGE TO PUMP ONLY (NO BOILER INTERLOCK) BY SUBSTITUTING A MARS 92290 SPST RELAY FOR THE 92340 DPDT RELAY – USE 92290 SPST RELAY TERMINALS 2 AND 4 FOR PUMP
V = LEGALETT VALVE ACTUATOR